HEBEI XINYU WELDING CO.,LTD

-top professional high tensile welding wire producer

About Us ……..……..……..2

Certificates & Team……..…….3

Equipment & Package…..…….5

Products……...8

Contact Us……..31

Phone: +86 13603173453 **E-mail: jasonyangvip@126.com** **Contact: Jason**

About Us

HEBEI XINYU WELDING CO.,LTD

1958~1990 **Dongguang No. 2 Machinery Factory** (state owned)

1991~2004 **DONGGANG Welding Materials Co.,Ltd**, which was founded by Hebei University of Technology and Hongkong Community Service Center, mainly produces High antirust CO_2 gas-shield welding wire, Submerged arc welding wire, Stainless steel welding wire & Flux-cored welding wire.

2005~ **Hebei XINYU Welding Co., Ltd**, which mainly produces ***High tenacity steel welding wire, CO2 wire (TIG, MIG, MAG), Non-copper-coated solid wires, Submerged arc & Stainless steel welding wire .*** Our products are widely applied to the welding of low-alloy high tensile large & key steel structures in coal machinery, construction machinery, petrochemical machinery, pressure vessels or tanks, oil & gas pipelines, military industry, shipbuilding, bridge and high-rise buildings etc.

All our products have passed ***ISO 9001-2008 quality system certification and CE, certification*** because of our advanced production lines, top professional testing equipment, intelligent R&D team and scientific management system. Meanwhile, we get 7 invention patents including a national one. We are a member of China Mechanical Engineering Association and China Welding Association. Other honors are " Consumer Trusting Products in Hebei province" " Famous Brand products in Hebei province" " Good Credit Enterprise in Hebei Province" and "China Key &Leading Enterprise in high tensile steel welding wire".

Our ***Welding wires*** are exported to USA, Italy, Brazil, Russia and India etc.

Welcome you to our factory any time.

part of our domestic customers

Certificates & Team

（副本）

认证证书

证书号：USA12Q23077R0M

兹证明

河北鑫宇焊业有限公司

河北省沧州市东光县建设路38号

邮编：061600

质量管理体系符合标准

ISO 9001:2008

质量管理体系适用范围

低合金高强度钢、高强度结构钢用高韧性低飞溅微合金化气体保护焊丝的生产

发证日期 2012年09月26日

证书有效期至 2015年09月25日

签发：许建平

北京东方纵横认证中心

EACC-1330208

ISO 9001

CONFIRMATION

for welding consumable manufacturer

No.: 0035-CPD-C746-13

Name and address of the manufacturer: Hebei Xinyu Welding Corporation, No.38, Jianshe Road, Dongguang, Hebei Province 061600, P.R. China

The following welding consumable products have met the requirements for initial type testing described in EN 13479 section 7.2

Type	Trade name	Classification	Size
Filler wire	GHS-50	ISO14341-A – G 42 4 M21 3Si1	0.8 – 1.6 mm
Filler wire	GHS-60	ISO14341-A – G 46 4 M21 Z3Si	0.8 – 1.6 mm
Filler wire	GHS-70	ISO16834-A – G 62 2 M21 ZMn3Cr	0.8 – 1.6 mm
Filler wire	GHS-80	ISO16834-A – G 69 2 M21 ZMn3NiMo	0.8 – 1.6 mm
Filler wire	GHS-90	ISO16834-A – G 79 2 M21 ZMn3Ni2CrMo	0.8 – 1.6 mm

After examination of the factory production control according to the requirements described in Annex ZA of the standard EN 13479 the manufacturer is entitled to affix the following marking to the above-mentioned welding consumables:

CE 0035

13

0035-CPD-C746

EN13479

The next surveillance of the factory production control is due by end of June 2014.

Yokohama, June 22, 2013

Notified Body for Welding Consumables

www.tuv.com

TÜVRheinland® Precisely Right.

C E certificate

证书号第472587号

发明专利证书

发明名称：高强度结构钢用气体保护焊丝

发明人：金秋生

专利号：ZL 2007 1 0186413.3

专利申请日：2007年11月16日

专利权人：金秋生

授权公告日：2009年2月18日

局长 田力普

2009年2月18日

第1页（共1页）

Patent

安全生产标准化

Work Safety Standardization

证书

CERTIFICATE

证书编号：AQB II JX 冀 201200137

河北鑫宇焊业有限公司

安全生产标准化二级企业

（机械）

有效期至：2015年11月

二〇一一年十一月

国家安全生产监督管理总局监制

State Administration of Work Safety

Work Safety standardization

河北鑫宇焊业有限公司
HEBEI XINYU WELDING CO.,LTD
XINYU
高强钢焊丝
自主专利技术

IFWT 2014 焊接国际论坛
—— 高强钢先进焊接技术
IFWT 2014 Advanced High Strength Steel
主办单位：中国机
焊接分会
2014年
维克多科技集团（中国）
徐州工程机械集团有限公司

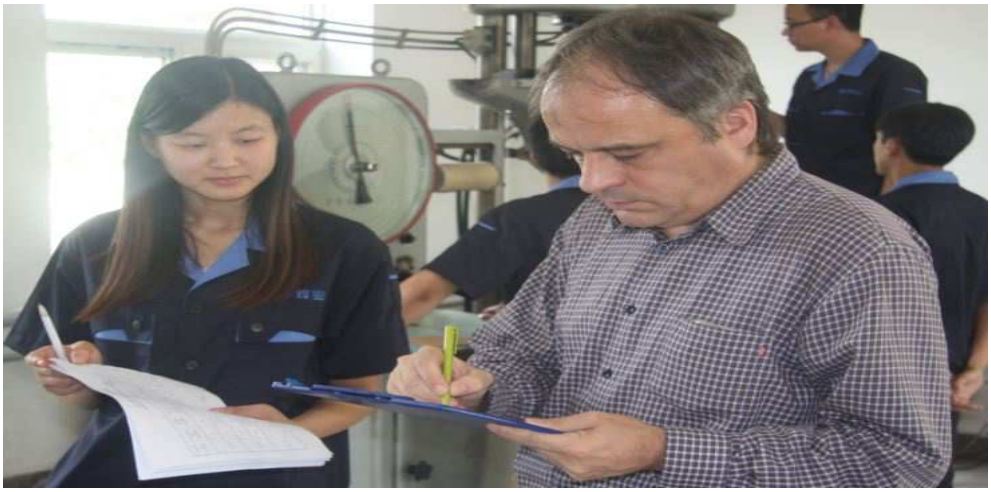

Equipment & Package

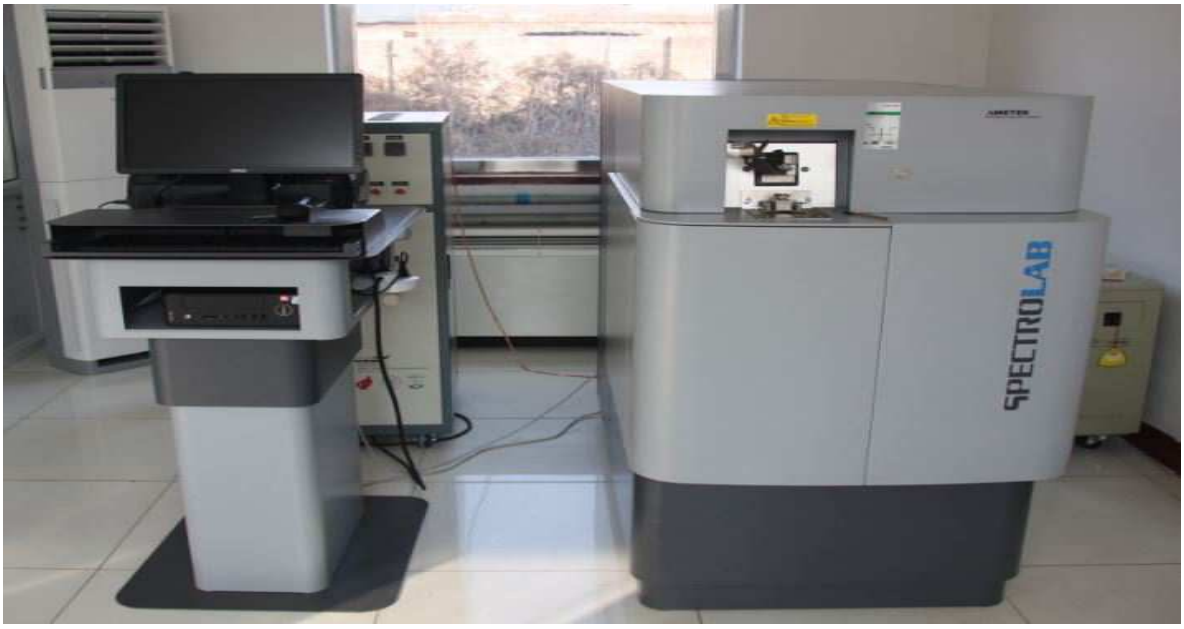

GHS-80
GHS-50
GHS-60
GHS-70
GHS-70

Products (*part of all*)

Notice ……..……...9
Drum packaged wire……..……..11

Non-copper-coated solid wire……...…..12

Widely used welding wire (TIG, MIG, MAG)

ER 70S-6 ……..…13

High tenacity steel welding wire

GHS-60…….…14
GHS-60-2 …….…15
GHS-70 ……16
GHS-76……..17
GHS-80…….....18
GHS-90……...…19
XM-58 …….……..20

Submerged arc welding wire

H08A……...……21
H08MnA……22
H10Mn2……23
H10MnSi……...…24
H08Mn2NoA…….....…25

Stainless steel welding wire

XMS-308……26
XMS-308L……27
XMS-316……....…28
XMS-309……29
XMS-307……..…..30

MAG/CO_2 Welding

(1) Notice about MAG / CO_2 welding:

1. please use specialized welding gas, eg: purity of CO_2≧99.5%，H_2O≦0.005%，Ar ≧99.99%. Gas flow: 20~25L/min.
2. wind affects arc and welding pool, please take steps to block the wind.
3. there is smoke when welding, pay attention to ventilation.
4. distance between Tip and base steel is about 15mm when current is below 250A; and 20~25mm when current is above 250A.
5. welding materials should be stored in dry places.
6. please check the welder ,wire feeder, gas regulator and heater before operation.
7. please keep the percentage of mixed gas stable and keep gas pressure stay the same.
8. as to thin steel plate, downward welding in the inclined position or forward welding is recommended,(pictures are followed below).
9. please move Plastic Spool and Basket Spool in a correct way.

Relation among base metal, weld gun and bead:

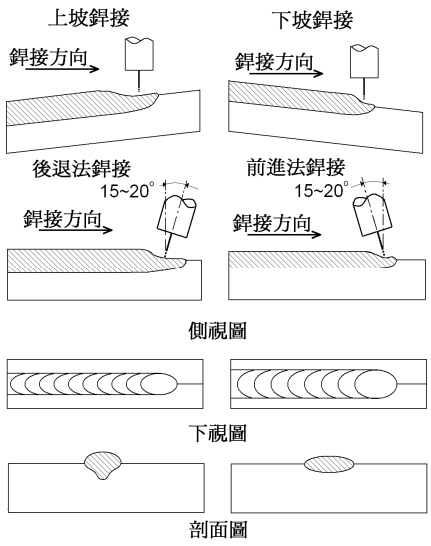

Note:

上坡銲接：upward welding　　下坡銲接：downward welding

銲接方向：weld direction　　後退法銲接：backward　前進法銲接：forward

側視圖：　side view　　下視圖：vertical view　剖面圖：sectional view

MAG/CO_2 Welding

(2) welding conditions & effect：

About MAG/CO_2 welding，different welding conditions affect bead appearance and penetration state greatly, please choose the right conditions according to your purpose.

a. Angle of weld gun (backward)

(1) narrow and convex bead

(2) deep penetration

(3) apt to blow hole

b. high welding speed

(1) narrow and convex bead

(2) penetration become shallow

(3) splash become more

c. Tip is much high to the base

(1) wire feeding speed stable, while current becomes low

(2) bead is not apt to be straight

d. base surface

blow holes are apt to appear when oil paint rust coating on the base

e. shielding gas

(1)wind or not enough gas flow creats blow holes.

(2)arc shape, bead shape&doposited metal properties vary with shielding gas

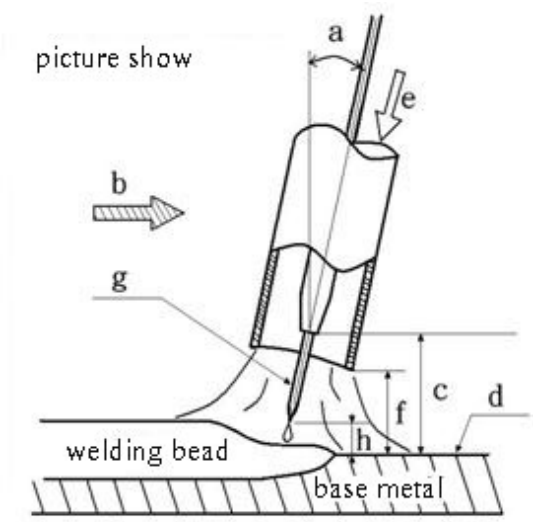

f.gas hood height

(1) more height&less shielding gas let blow holes appear

(2) too low&long time welding, splash will be attached and block our view

g. too high current

(1) wider bead

(2)deeper penetration

(3)more convex bead

(4)smaller splash

(5) big welding pool, not good bead shape

h. too long arc

（too high voltage）

(1)wider bead

(2)even bead

(3) more shallow penetration

(4)bigger splash

Drum packaged wire

Welding wires are twined in a drum and can be easily drawn out. Smooth wire feeding and no twist condition increase productivity in welding fabrication because it can contain more wire than other ways. Widely used in robot welding and automatic welding.

【How to use】

:

a	Weld gun	E	conduit
b	cable	F	straightener
C	clip	G	dome
d	Feeding machine	H	Fastening ring

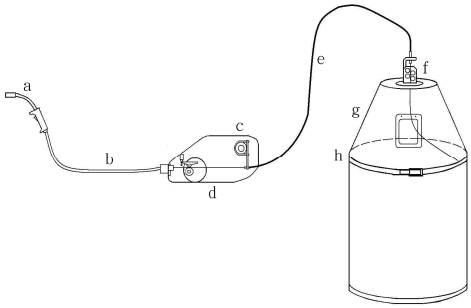

【How to move, open &feed】:

1 →move

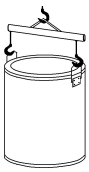

2→open

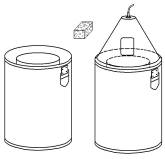

3→feed

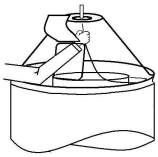

* use specialized sling
* don't remove the cover
* keep the drum upright

* remove cover&sponge
* fasten dome with ring
* don't remove the hold down ring

* feed the end of wire completely through the conduit with your hands

＜Caution＞ the following actions are forbidden

Sling only one side

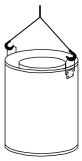

Moving without covers

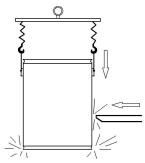

Get impacted

【Package】:

Diameter（mm）	Weight（kg）	Drum：diameter x height（mm）
0.9、1.0、1.2	100,125	510x500
0.9、1.0、1.2、1.4	200,250,300	510x820
1.4、1.6	350,400	660x770

NON-COPPER-COATED SOLID WIRE

Non-copper-coated solid wires made by Hebei XINYU Welding Co.,Ltd have been approved by National Quality Control & Inspection Center for Welding Materials, recognized by GB/T8110-2008. the unique advanced surface features increase performance and efficiency, whether your process is manual, mechanized or robotic, helping reduce overall welding costs and create a cleaner working environment. The production of Copper-free wires fully supports our national policy of "energy saving and emission reduction", and its application will be the mainstream for future welding. Therefore, it is wise to choose non-copper coated wires.

Now let's compare the Copper coated wire with Non-copper-coated wire, and find more advantages with Non-copper-coated wires:

1. **Non-copper-coated wires do no harm to welders & environment with little fume emission. While the copper coated wires create much fume caused by the burning copper, which is bad for our health especially our breathing organs and eyes.**
2. **More stable arc because its droplet transfer frequency is higher than that of copper coated wires. The arc is still stable during sharp change of wire extension.**
3. **Extremely low spatter level with Non-copper-coated wires. Little droplet and amount of spatter is still controllable with high current.**
4. **Wider range of voltage and current by Non-copper-coated wires.**
5. **Trouble-free feed ability, even at high wire feed speeds and long feed distance owing to no copper scrap. We can get higher productivity and reduce equipment downtime.**
6. **Higher strength and tenacity in copper-free wires.**
7. **Better anti-rust property and electric conductivity because our newly developed methods are applied to the surface of solid wires.**
8. **Less abrasion on contact tips on account of no copper scrap.**

Author : Jason

Widely used welding wire

ER 70S-6

Model: AWS ER70S-6
J I S YGW12
G B ER50-6

Shield gas: CO_2 or 80%Ar+20%CO_2

Feature&use:

(1) widely used MAG / CO_2 welding wire, full position welding.

(2) adapt to wide current range. Arc is still stable in low current, little sparks or splash

Notice:

1. attention to the purity and mixing ratio of the shield gas.
2. gas flow rate: 15~25 L/Min.
3. wire extension: 15~20mm.
4. oil, rust, moisture and dust should be cleaned in the welded area.
5. welding hood should be clear.

An example of Chemical composition of deposited metal (wt%):（shield gas: CO_2）

C	Si	Mn	P	S
0.08	0.68	1.32	0.011	0.008

An example of Mechanical properties of deposited metal:（shield gas: CO_2）

Tensile strength MPa	Yield strength MPa	Elongation %	Impact value	
			℃	J
560	440	31	-30	89

Diameter & Current (DC+):

Diameter (mm)		0.8	0.9	1.0	1.2	1.4	1.6
Current Amp	Flat welding	50~180	50~200	50~220	80~350	100~470	200~500
	Vertical up welding	50~100	50~140	50~140	50~140	100~180	—
	Overhead welding	50~100	50~120	50~120	50~160	—	—
	Vertical Down welding	50~100	50~200	—	—	—	—

High tenacity steel welding wire

TYPE: **GHS-60**

Model: AWS ER80S-G
JIS —
GB ER55-G

Shield gas 80%Ar+ 20%CO_2

Feature&use:

(1) 600MPa high tensile steel welding wire, perfect mechanical properties.

(2) mixed shielding gas, widely applied to steel structures, coal and construction machinery, automobiles etc.

Notice:

1. attention to the purity and mixing ratio of the shield gas.
2. gas flow rate: 15~25 L/Min.
3. wire extension: 15~20mm.
4. oil, rust, moisture and dust should be cleaned in the welded area.
5. welding hood should be clear.

An example of Chemical composition of deposited metal (wt%) (shieldgas:80%Ar+20%CO_2)

C	Si	Mn	P	S	others
0.07	0.54	1.29	0.011	0.006	moderate

An example of Mechanical properties of deposited metal: (shield gas:CO_2)

Tensile strength MPa	Yield strength MPa	Elongation %	Impact value	
			℃	J
660	580	25	-30	98

Diameter & Current (DC+):

Diameter (mm)		0.8	0.9	1.0	1.2	1.4	1.6
Current Amp	Flat welding	50~180	50~200	50~220	80~350	100~470	200~500
	Vertical up welding	50~100	50~140	50~140	50~140	100~180	—
	Overhead welding	50~100	50~120	50~120	50~160	—	—
	Vertical Down welding	50~100	50~200	—	—	—	—

High tenacity steel welding wire

TYPE: GHS60-2

Model: AWS ER80S-G

G B ER55-G

Shield gas 80%Ar+ 20%CO_2

Feature&use:

(1) 600MPa high tensile welding wire, containing Ni, Cr etc, excellent mechanical properties.

(2) using mixed shield gas, applied to automobiles and coal machinery.

Notice:

1. attention to the purity and mixing ratio of the shield gas.
2. gas flow rate: 15~25 L/Min.
3. wire extension: 15~20mm.
4. oil, rust, moisture and dust should be cleaned in the welded area.
5. welding hood should be clear.

An example of Chemical composition of deposited metal (wt%): (shield gas:80%Ar+ 20%CO_2)

C	Si	Mn	P	S	others
0.08	0.55	1.20	0.010	0.006	moderate

An example of Mechanical properties of deposited metal: (shield gas:CO_2)

Tensile strength MPa	Yield strength MPa	Elongation %	Impact value	
			℃	J
645	570	26	-30	110

Diameter & Current (DC+):

Diameter (mm)		0.8	0.9	1.0	1.2	1.4	1.6
Current Amp	Flat welding	50~200	50~200	50~220	80~350	100~470	200~500
	Vertical up welding	50~140	50~140	50~140	50~140	100~180	—
	Overhead welding	50~120	50~120	50~120	50~160	—	—
	Vertical Down welding	50~200	50~200	—	—	—	—

High tenacity steel welding wire

TYPE: **GHS-70**

Model AWS ER100S-G

G B ER69-G

Shield gas 80%Ar+ 20%CO_2

Feature&use：

(1) 700MPa high tensile steel welding wire, excellent mechanical properties.

(2) mixed shield gas, widely used to hydraulic support and scraper chain in coal machinery.

Notice：

1. attention to the purity and mixing ratio of the shield gas.
2. gas flow rate: 15~25 L/Min.
3. wire extension: 15~20mm.
4. oil, rust, moisture and dust should be cleaned in the welded area.
5. welding hood should be clear.

An example of Chemical composition (wt%)：（shield gas:80%Ar+ 20%CO_2）

C	Si	Mn	P	S	others
0.08	0.60	1.45	0.010	0.005	moderate

An example of Mechanical properties of deposited metal：（shield gas: :80%Ar+ 20%CO_2）

Tensile strength MPa	Yield strength MPa	Elongation %	Impact value	
			℃	J
750	655	23	-20	94

Diameter & Current (DC+)：

Diameter (mm)		0.8	0.9	1.0	1.2	1.4	1.6
Current Amp	Flat welding	50~180	50~200	50~220	80~350	100~470	200~500
	Vertical up welding	50~100	50~140	50~140	50~140	100~180	—
	Overhead welding	50~100	50~120	50~120	50~160	—	—
	Vertical Down welding	50~100	50~200	—	—	—	—

High tenacity steel welding wire

TYPE: GHS-76

Specification	AWS	ER110S-G
	GB	ER76-G
Shieding Gas	80%Ar+ 20%CO_2	

Characteristics:

(1) This product is the 760MPa grade high strength steel wire, it has very good mechanical properties.

(2) With the mixed shielding gas,this wire can be used to welding the important corresponding level structures,

Precautions:

1. Pay attention to the gas purity and mixture ratio.
2. Keep the gas flow rate between 15 ~ 25 L / Min.
3. The extension length keep between 15 to 20mm
4. Clear the oil, rust, moisture, dust and other debris of the welded parts.
5. keep the welding hood clean and unobstructed.

One chemical composition of the weld metal sample (wt%)

（Shielding Gas:80%Ar+20%CO_2）

C	Si	Mn	P	S	Else
0.07	0.45	1.35	0.010	0.005	--

One chemical composition of the weld metal sample (wt%)

（Shielding Gas:80%Ar+20%CO_2）

Tensild Strength MPa	Yield Strength MPa	Elongation %	Impact Energy Value	
			℃	J
830	740	22	-20	105

The applicable current range and specifications of the product (DC+):

Dia (mm)		0.8	0.9	1.0	1.2	1.4	1.6
Current Range Amp	Flat welding	50~180	50~200	50~220	80~350	100~470	200~500
	Vertical up welding	50~100	50~140	50~140	50~140	100~180	—
	Overhead welding	50~100	50~120	50~120	50~160	—	—
	Vertical Down welding	50~100	50~200	—	—	—	—

High tenacity steel welding wire

TYPE: GHS-80

Specification	ISO	G692M21ZMn3NiMo
	AWS	ER110S-G
	GB	ER76-G
Shieding Gas	80%Ar+ 20%CO_2	

Characteristics:

(1) This product is the 800MPa grade high strength steel wire, it has very good mechanical properties.

(2) With the mixed shielding gas,this wire can be used to welding the important corresponding level structures,

Precautions:

1. Pay attention to the gas purity and mixture ratio.
2. Keep the gas flow rate between 15 ~ 25 L / Min.
3. The extension length keep between 15 to 20mm
4. Clear the oil, rust, moisture, dust and other debris of the welded parts.
5. keep the welding hood clean and unobstructed.

One chemical composition of the weld metal sample (wt%)

（Shielding Gas:80%Ar+20%CO_2）

C	Si	Mn	P	S	Else
0.07	0.50	1.52	0.008	0.005	--

One chemical composition of the weld metal sample (wt%)

（Shielding Gas:80%Ar+20%CO_2）

Tensild Strength MPa	Yield Strength MPa	Elongation %	Impact Energy Value	
			℃	J
835	760	23	-20	95

The applicable current range and specifications of the product (DC+):

Dia (mm)		1.2	1.4	1.6
Current Range Amp	Flat /Flat fillet welding	200~350	250~450	300~550
	horizontal welding	200~320	250~400	300~450

High tenacity steel welding wire

TYPE: GHS-90

Specification	ISO	G79 2 M21 ZMn3Ni2CrMo
	AWS	ER120S-G
	GB	ER83-G
Shieding Gas	80%Ar+ 20%CO_2	

Characteristics:

(1) This product is the 760MPa grade high strength steel wire, it has very good mechanical properties.

(2) With the mixed shielding gas,this wire can be used to welding the important corresponding level structures,

Precautions:

1. Pay attention to the gas purity and mixture ratio.
2. Keep the gas flow rate between 15 ~ 25 L / Min.
3. The extension length keep between 15 to 20mm
4. Clear the oil, rust, moisture, dust and other debris of the welded parts.
5. keep the welding hood clean and unobstructed.

One chemical composition of the weld metal sample (wt%)

（Shielding Gas:80%Ar+20%CO_2）

C	Si	Mn	P	S	Else
0.08	0.61	1.56	0.007	0.005	--

One chemical composition of the weld metal sample (wt%)

（Shielding Gas:80%Ar+20%CO_2）

Tensile Strength MPa	Yield Strength MPa	Elongation %	Impact Energy Value	
			℃	J
940	890	18	-20	58

The applicable current range and specifications of the product (DC+):

Dia (mm)		0.8	0.9	1.0	1.2	1.4	1.6
Current Range Amp	Flat welding	50~180	50~200	50~220	80~350	100~470	200~500
	Vertical up welding	50~100	50~140	50~140	50~140	100~180	—
	Overhead welding	50~100	50~120	50~120	50~160	—	—
	Vertical Down welding	50~100	50~200	—	—	—	—

High tenacity steel welding wire

TYPE: XM-58

Model:	AWS	ER70S-G
	J I S	YGW11
	G B	ER50-G
Shielding gas:	CO_2	

Feature&Use:

(1) JM-58 containing Ti ， suit for high current welding.

(2) stable are, small and little splash in high current welding.

(3) Applied to engineer machinery, bridges and thick steel plate welding.

An example of Chemical composition of deposited metal (wt%):（CO_2）

C	Si	Mn	P	S
0.08	0.50	1.28	0.010	0.011

An example of Mechanical properties of deposited metal: (CO_2）

Tensile strength MPa	Yield strength MPa	Elongation %	Impact value	
			℃	J
580	500	28	0	180
			-30	85

Size & Current (DC+):

Diameter (mm)		1.0	1.2	1.4	1.6
Current Amp	Flat welding /Flat fillet welding	180~260	200~350	250~450	300~550
	horizontal welding	180~240	200~320	250~400	300~450

Submerged arc welding wire

TYPE:**H08A**

For low-carbon steel &490MPa high tensile steel

Model:

AWS	F7A0-EL8
J I S	S501-H
G B	F5A2-H08A

Feature&Use:

(1) neat and smooth bead、slag easy to peel.

(2) good performance in rust steel welding & good gas hole resistance.

(3) monopolar, bipolar, AD, or DC is optional.

(4) applied to butt welding or fillet welding of steel structures.

An example of Chemical composition of deposited metal (wt%):

C	Si	Mn	P	S
0.060	0.80	1.18	0.016	0.010

An example of Mechanical properties of deposited metal:

Tensile strength MPa	Yield strength MPa	Elongation %	Impact value	
			℃	J
550	480	29	0	63
			-20	37

Submerged arc welding wire

TYPE:**H08MnA**

For low-carbon steel &490MPa high tensile steel

Model:		
	AWS	F7A2-EM12K
		F7A4-EM12K
	J I S	S502-H
	G B	F5A3-H08MnA

Feature&Use:

(1) good impact property in low temperature, slag easy to peel.

(2) the wire bears high melting rate, high efficiency, less consumption of soft solder. monopolar, bipolar, AD, or DC is optional.

(3) belongs to neutral flux, applied to Multi-electrode welding of thick Steel plate and single or multi-layer butt welding of pressure vessels, ships, bridges etc.

An example of Chemical composition of deposited metal (wt%):

C	Si	Mn	P	S
0.052	0.33	1.50	0.010	0.010

An example of Mechanical properties of deposited metal:

Tensile strength MPa	Yield strength MPa	Elongation %	Impact value	
			℃	J
510	440	32	-20	88

Submerged arc welding wire

TYPE:**H10Mn2**

For 490MPa high tensile steel

Model:

AWS	F7A4-EH14
J I S	S502-H
G B	F5A3-H10Mn2

Feature&Use:

(1) neat and smooth bead、slag easy to peel.

(2) good mechanical properties of deposited metal，monopolar, bipolar, AD, or DC is optional.

(3) applied to butt welding or fillet welding of steel structures.

An example of Chemical composition of deposited metal (wt%):

C	Si	Mn	P	S
0.060	0.80	1.18	0.016	0.010

An example of Mechanical properties of deposited metal:

Tensile strength MPa	Yield strength MPa	Elongation %	Impact value	
			℃	J
550	480	29	-30	63
			-40	47

Submerged arc welding wire

TYPE: H10MnSi

For low-carbon & low-alloyed steel

Model: AWS F7A0-EM13K

G B F5A2-H10MnSi

Feature&Use:

(1) good mechanical properties of deposited metal.

(2) high efficiency and good stable quality.

(3) applied to low-carbon & low-alloyed steel, such as pressure vessels, ships, bridges etc.

Chemical composition of deposited metal (wt%):

C	Si	Mn	Cr	Ni	Cu	S	P
≤0.14	0.60~0.90	0.80~1.10	≤0.20	≤0.30	≤0.35	≤0.035	≤0.035

An example of Mechanical properties of deposited metal:

Tensile strength MPa	Yield strength MPa	Elongation %	Impact value	
			℃	J
580	485	23	-20	70

Submerged arc welding wire

TYPE: H08Mn2MoA

Model: AWS **EA3**

For 620~690MPa low-alloyed high tensile steel

G B **H08Mn2MoA**

Feature&Use:

(1) using high alkaline flux, it can get best comprehensive mechanical properties of deposited metal.

(2) applied to ships, automobiles, power station, construction machinery, petrochemical industry, pressure vessels etc.

An example of Chemical composition of deposited metal (wt%):

C	Si	Mn	S	P	Ni	Cr	Ti	Mo
0.10	0.20	1.77	0.009	0.015	0.025	0.025	0.15(add)	0.58

An example of Mechanical properties of deposited metal:

Soft solder	Tensile strength MPa	Yield strength MPa	Elongation %	Impact value	
				℃	J
XF-B	720	635	20	-20	60

Stainless steel welding wire

XMS-308

Model: AWS ER308
G B S308

Shielding gas Ar+1~2%O_2

Feature&Use:

(1) deposited metal: 20%Cr-9%Ni , Austenite structure.
(2) applied to welding stainless steel of 18%Cr-8%Ni，such as AISI 304、301、302、308.
(3) stable Arc, neat and nice bead, containing proper Ferrite, good anti-cracking property.

An example of Chemical composition of deposited metal (wt%):（Shielding gas: Ar+2%O_2）

C	Si	Mn	P	S	Cr	Ni
0.04	0.34	1.82	0.012	0.009	20.11	10.30

An example of Mechanical properties of deposited metal (Shielding gas: Ar+2%O_2）

Tensile strength MPa	Yield strength MPa	Elongation %
580	420	44

Size & Current (DC+):

Condition \ Dia(mm)		0.8	0.9	1.0	1.2	1.4	1.6
short circuiting transfer	A	40~120	60~140	80~160	100~210	—	—
	V	15~20	15~21	16~22	17~22	—	—
arc spray transfer	A	160~210	170~260	180~280	200~300	210~320	220~330
	V	24~28	24~30	24~30	24~30	24~32	24~32

Stainless steel welding wire

XMS-308L

Model: AWS ER308L
G B S308L

Shielding gas Ar+1~2%O_2

Feature&Use:

(1) deposited metal: low carbon 20%Cr-9%Ni
(2) good performance in welding, anti-cracking and anti-corruption
(3) applied to welding of low carbon stainless steel 18%Cr-8%Ni, such as AISI 304L、321、308L.

An example of Chemical composition of deposited metal (wt%): (Shielding gas:Ar+2%O_2)

C	Si	Mn	P	S	Cr	Ni
0.019	0.42	1.65	0.011	0.009	20.11	10.32

An example of Mechanical properties of deposited metal (Shielding gas: Ar+2%O_2)

Tensile strength MPa	Yield strength MPa	Elongation %
580	410	42

Size & Current (DC+):

Condition \ Dia(mm)		0.8	0.9	1.0	1.2	1.4	1.6
short circuiting transfer	A	40~120	60~140	80~160	100~210	—	—
	V	15~20	15~21	16~22	17~22	—	—
arc spray transfer	A	160~210	170~260	180~280	200~300	210~320	220~330
	V	24~28	24~30	24~30	24~30	24~32	24~32

Stainless steel welding wire

XMS-316

Model: AWS ER316
G B S316

Shielding gas Ar+1~2%O_2

Feature&Use:

(1) deposited metal: 18%Cr-12%Ni-2%Mo ,Austenite structure.

(2) deposited metal containing Mo, good corruption resistance to acetic acid, CH3COOH, orthophosphoric acid and salts.

(3) applied to chemical vessels made of stainless steel AISI 316, or applied to stainless steel 13Cr、18Cr without heat treatment after welding.

An example of Chemical composition of deposited metal (wt%):（Shielding gas:Ar+2%O_2）

C	Si	Mn	P	S	Cr	Ni	Mo
0.018	0.42	1.91	0.012	0.009	19.14	12.63	2.53

An example of Mechanical properties of deposited metal (Shielding gas: Ar+2%O_2）

Tensile strength MPa	Yield strength MPa	Elongation %
550	380	39

Size & Current (DC+):

condition \ Dia(mm)		0.8	0.9	1.0	1.2	1.4	1.6
short circuiting transfer	A	40~120	60~140	80~160	100~210	—	—
	V	15~20	15~21	16~22	17~22	—	—
arc spray transfer	A	160~210	170~260	180~280	200~300	210~320	220~330
	V	24~28	24~30	24~30	24~30	24~32	24~32

Stainless steel welding wire

XMS-309L

Model: AWS ER309L
G B S309L

Shielding gas Ar+1~2%O_2

Feature&Use:

(1) deposited metal: low carbon 24%Cr-13%Ni, Austenite structure.
(2) deposited metal contains proper ferrite, good welding performance and crack resistance.
(3) containing much Ni and Cr, it bears good anti-corruption & tenacity when used under 900℃.
(4) applied to carbon steel, Chromium-molybdenum alloy steel, stainless dissimilar steel, low carbon coated steel, and steel like AISI 309S、13Cr、18Cr.

An example of Chemical composition of deposited metal (wt%):（Shielding gas:Ar+2%O_2）

C	Si	Mn	P	S	Cr	Ni
0.018	0.35	1.88	0.011	0.008	23.88	12.87

An example of Mechanical properties of deposited metal (Shielding gas: Ar+2%O_2）

Tensile strength MPa	Yield strenth MPa	Elongation %
590	400	43

Size & Current (DC+):

Condition \ Dia(mm)		0.8	0.9	1.0	1.2	1.4	1.6
short circuiting transfer	A	40~120	60~140	80~160	100~210	—	—
	V	15~20	15~21	16~22	17~22	—	—
arc spray transfer	A	160~210	170~260	180~280	200~300	210~320	220~330
	V	24~28	24~30	24~30	24~30	24~32	24~32

Stainless steel welding wire

XMS-307Si

Model: AWS —
G B S307Si

Shielding gas Ar+1~2%O_2

Feature&Use:

(1) deposited metal: 20%Cr-9%Ni-6%Mn.
(2) its welding performance and welding pool fluidity are better than KMS-307HM
(3) excellent cracking resistance, applied to thick plate, articles bear much binding force, carbon steel, stainless dissimilar steel, high manganese steel and armor steel.

An example of Chemical composition of deposited metal (wt%): (Shielding gas:Ar+1%O_2)

C	Si	Mn	P	S	Cr	Ni
0.060	0.82	6.10	0.018	0.012	19.22	8.10

An example of Mechanical properties of deposited metal (Shielding gas: Ar+1%O_2)

Tensile strength MPa	Yield strength MPa	Elongation %
610	460	41

Size & Current (DC+):

condition \ Dia(mm)		0.8	0.9	1.0	1.2	1.4	1.6
short circuiting transfer	A	40~120	60~140	80~160	100~210	—	—
	V	15~20	15~21	16~22	17~22	—	—
arc spray transfer	A	160~210	170~260	180~280	200~300	210~320	220~330
	V	24~28	24~30	24~30	24~30	24~32	24~32

Contact Us

Hebei XINYU Welding Co.,Ltd

Address: No. 38 Jianshe road Dongguang county Hebei province China.

Phone: + 86 13603173453

Fax: + 86 317 7722909

Zip: 061600

Email: jasonyangvip@126.com

Skype: yarnmill

Attention: Jason yang
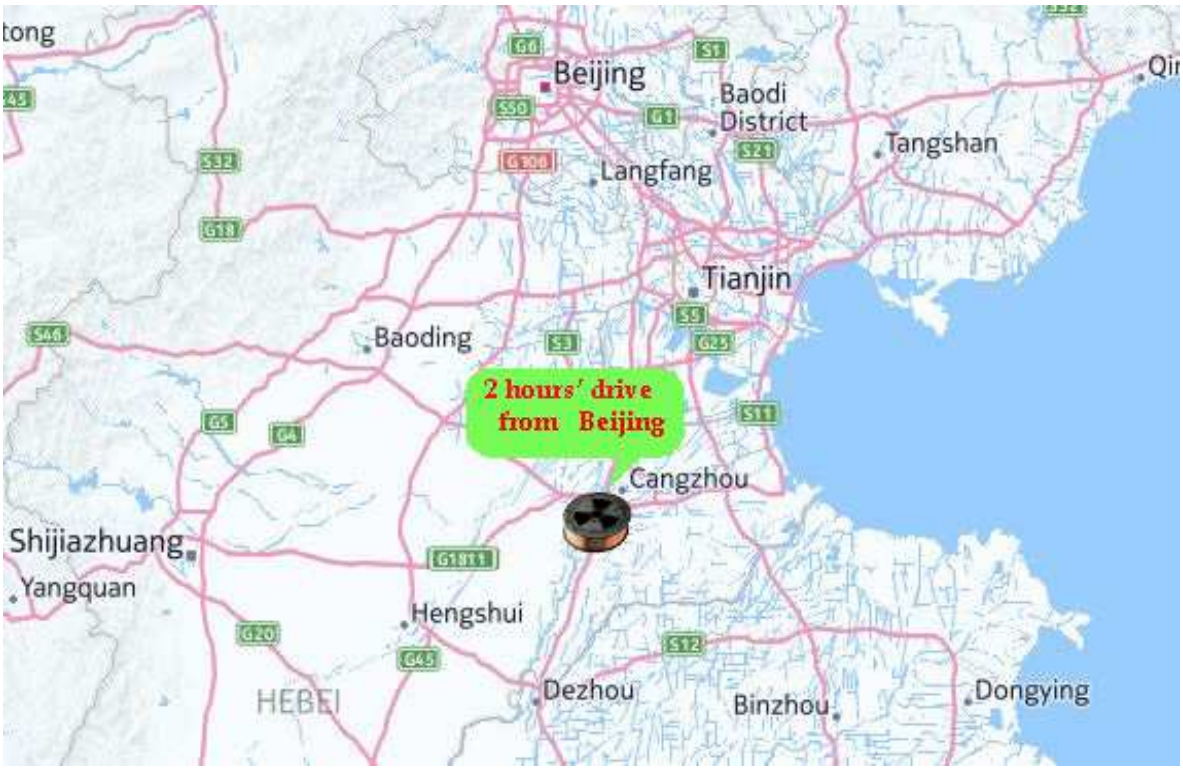
Web: www.hbxyhy.com